TECHNISCHE UNIVERSITÄT DRESDEN

DRESDEN concept

Jan Evler M.A., **Ehsan Asadi** M.Sc., Dr.-Ing. **Henning Preis**, Prof. Dr.-Ing. habil. **Hartmut Fricke**
Institute of Aviation and Logistics
Chair of Air Transport Technology and Logistics

Stochastic Control of Turnarounds at HUB -Airports

A Microscopic Optimization Modell Supporting Recovery Decisions in Day-to-Day Airline Ground Operations

SESAR Innovation Days 2018, Salzburg, Austria /// 04 December 2018

Structure & Contents

I. Motivation

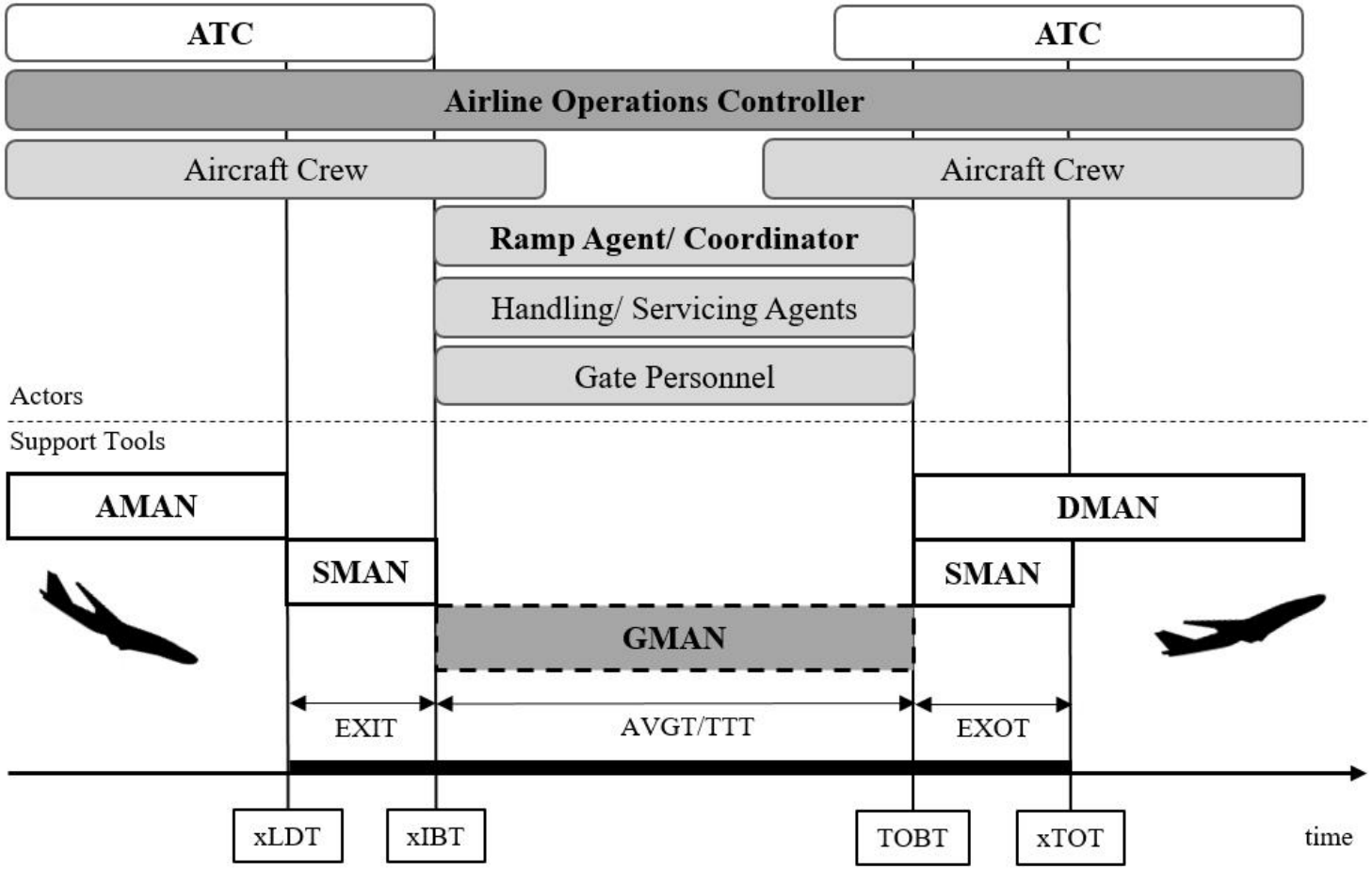

- Ground Manager GMAN as an extension of the EUROCONTROL tool chain for collaborative decision making
- Original GMAN concept (Oreschko et al., 2014) considers only **single aircraft** turnaround and lacks station-wide perspective
- Expansion of the **decision support function** for multiple **parallel turnaround events**
- Introduction of **control options and scheduling constraints**

II. Literature Review

Single Process Modelling through Operational Analyses

- Carr et al. (2005)
- Fricke und Schultz (2009)
- Schlegel (2010)

Stochastic Turnaround Modelling using PERT, Semi-Markov Chains or Monte Carlo Simulation

- Wu and Caves (2004)
- Oreschko et al. (2011-2014)
- Abd Allah Makhloof et al. (2014)
- Antonio et al. (2017)

Modelling of Mircoscopic Resource Constraints using Scheduling Approaches

- Yu Cheng (1998)
- Kuster et al. (2009)
- Norin et al. (2012)
- Padrón et al. (2016)

Pre-tactical Schedule Optimization through Strategic Addition of Buffer Times

- Wu and Caves (2004)
- AhmadBeygi et al. (2010)
- Silverio et al. (2013)

III. Prediction of the Target Off -Block Time

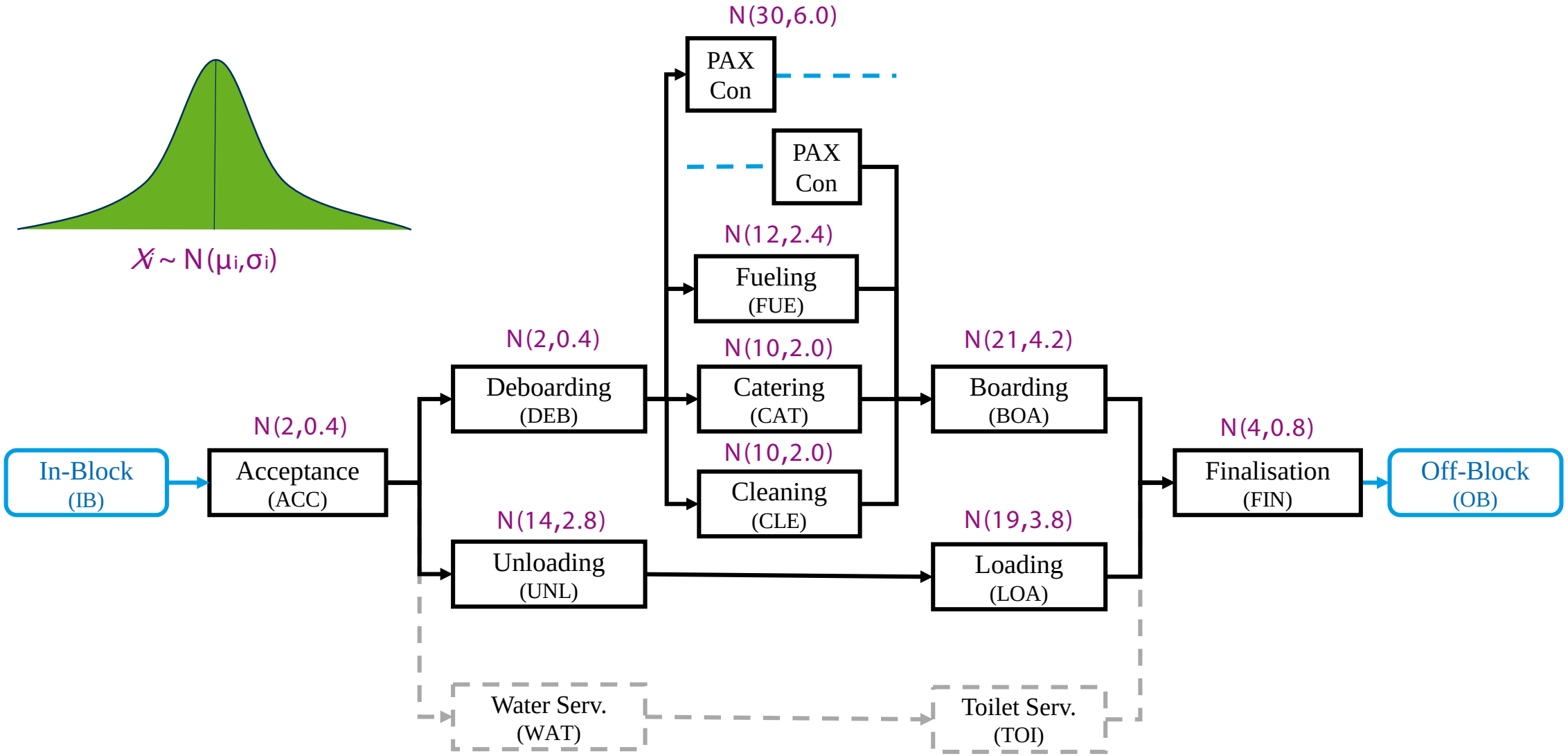

III. Prediction of the Target Off -Block Time

1) Analytical Convolution
2) Monte Carlo Simulation

$X_{(TOBT)} \sim ?$

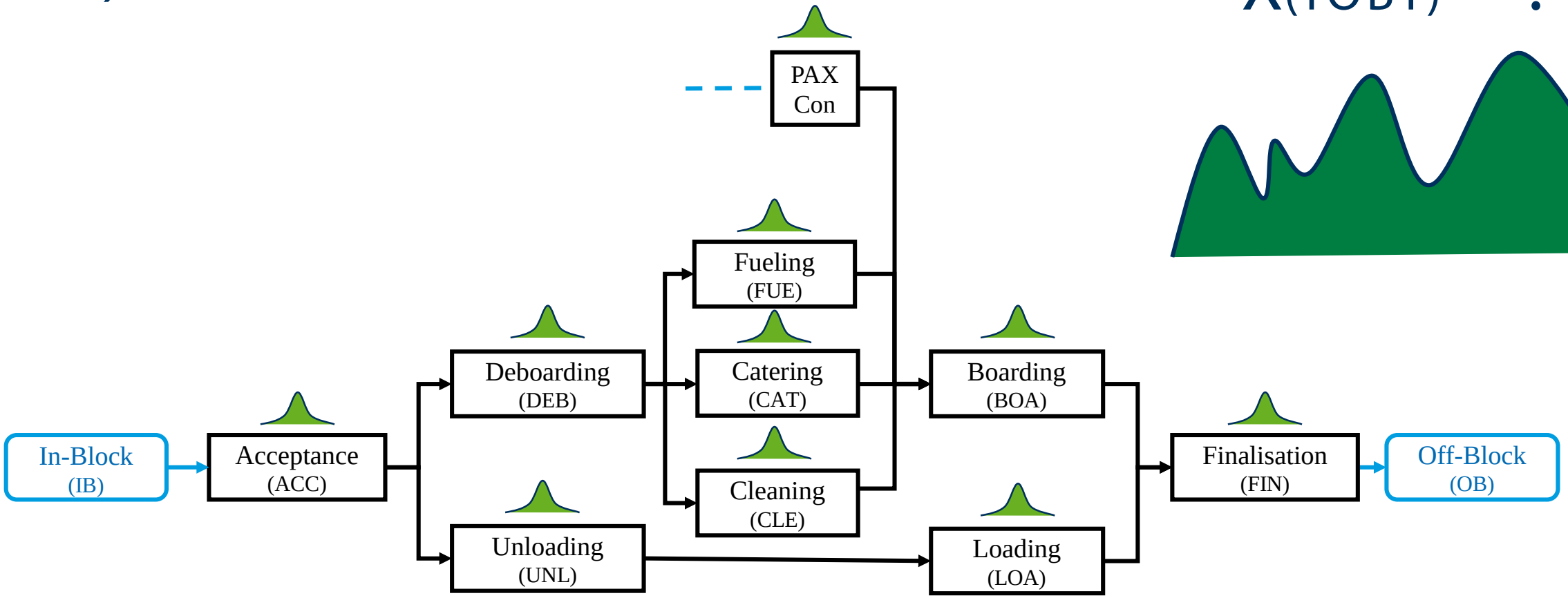

III. Prediction of the Target Off -Block Time

1) Analytical Convolution

$$Y_1 = \max(X_{FUE}, X_{CAT}, X_{CLE})$$

$$F_{Y_1}(a) = F_{X_{FUE}}(a) \cdot F_{X_{CAT}}(a) \cdot F_{X_{CLE}}(a)$$

$$f_{Y_1}(a) = F'_{Y_1}(a) = f_{FUE}F_{CAT}F_{CLE} + F_{FUE}f_{CAT}F_{CLE} + F_{FUE}F_{CAT}f_{CLE}$$

$$F_Z(a) = \int_0^a \int_0^{a-y_1} f_{X_1,Y_1}(x_1, y_1)dx_1dy_1$$

$$= \int_0^a f_{Y_1}(y_1) \int_0^{a-y_1} f_{X_1}(x_1)dx_1dy_1 = \int_0^a f_{Y_1}(y_1)F_{X_1}(a - y_1)\, dy_1$$

$$F_{Y_2}(a) = F_{X_2}(a) \cdot F_Z(a)$$

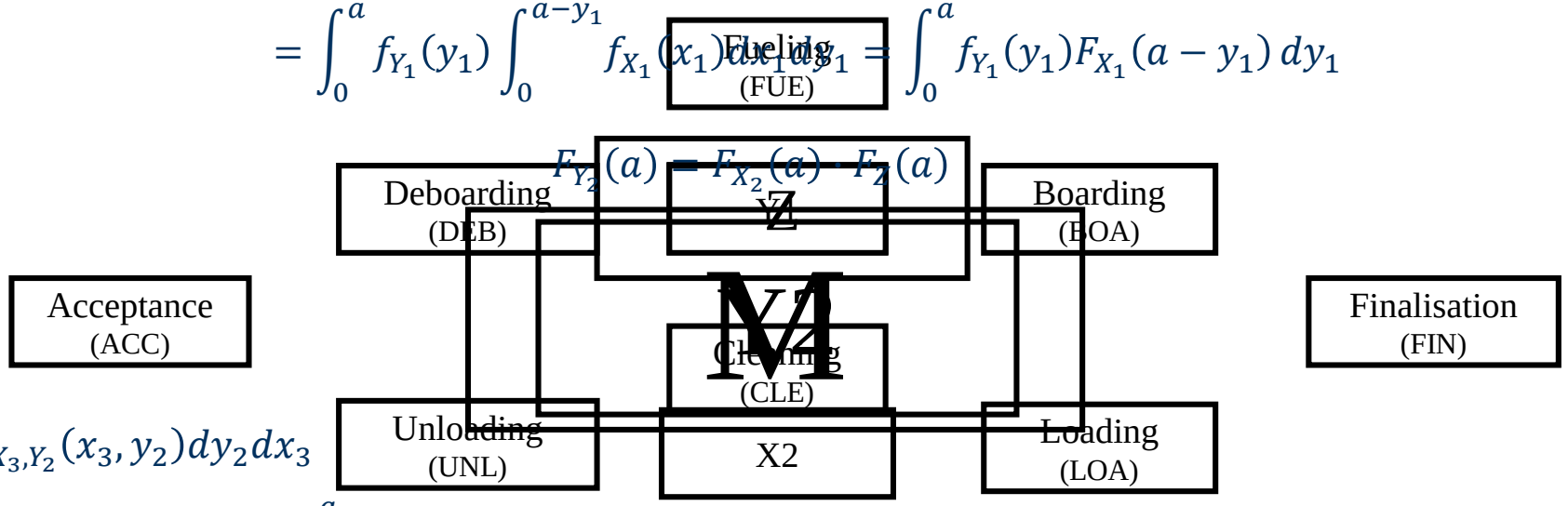

$$F_M(a) = \int_0^a \int_0^{a-x_3} f_{X_3,Y_2}(x_3, y_2)dy_2dx_3$$

$$= \int_0^a f_{X_3}(x_3) \int_0^{a-x_3} f_{Y_2}(y_2)dy_2dx_3 = \int_0^a f_{X_3}(x_3)F_{Y_2}(a - x_3)\, dx_3$$

III. Prediction of the Target Off -Block Time

2) Monte Carlo Simulation (10,000 Iterations)

Network Path		Mean in min	St.Dev. in min
1	*ACC-DEB-FUE-BOA-FIN-OB*	46.00	5.12
2	*ACC-DEB-CAT-BOA-FIN-OB*	44.00	4.94
3	*ACC-DEB-CLE-BOA-FIN-OB*	44.00	4.94
4	*ACC-UNL-LOA-FIN-OB*	39.00	4.80
JP	**Joint Path Distribution**	**47.19**	**4.52**

Joint **Path 4**

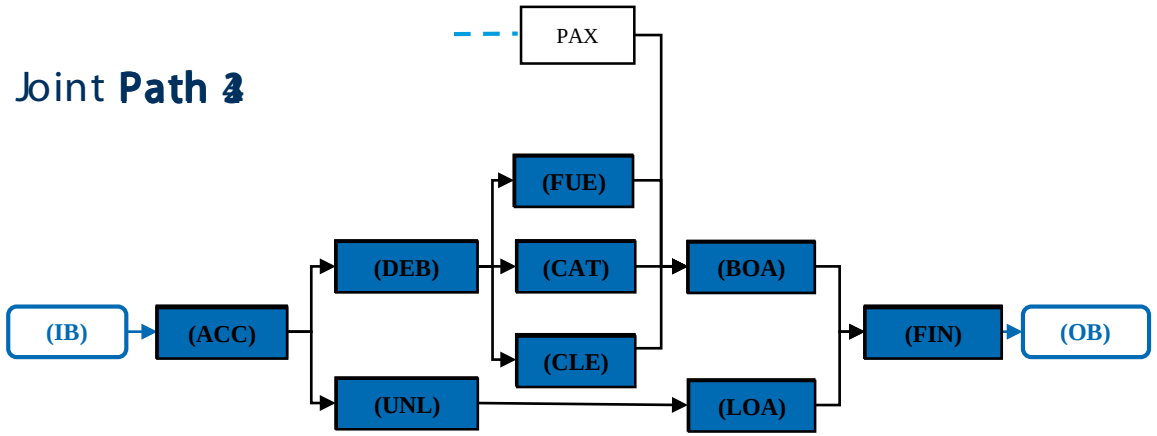

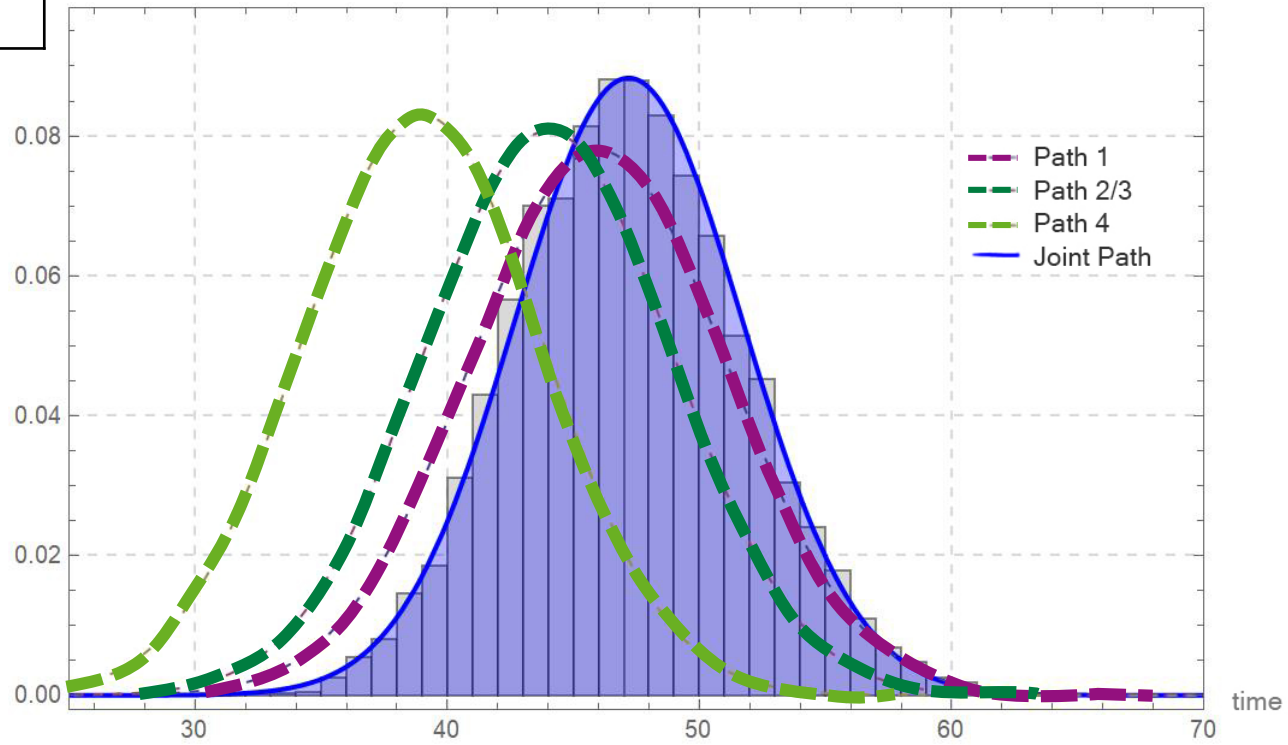

IV. Modelling Turnaround Control with RCPSP

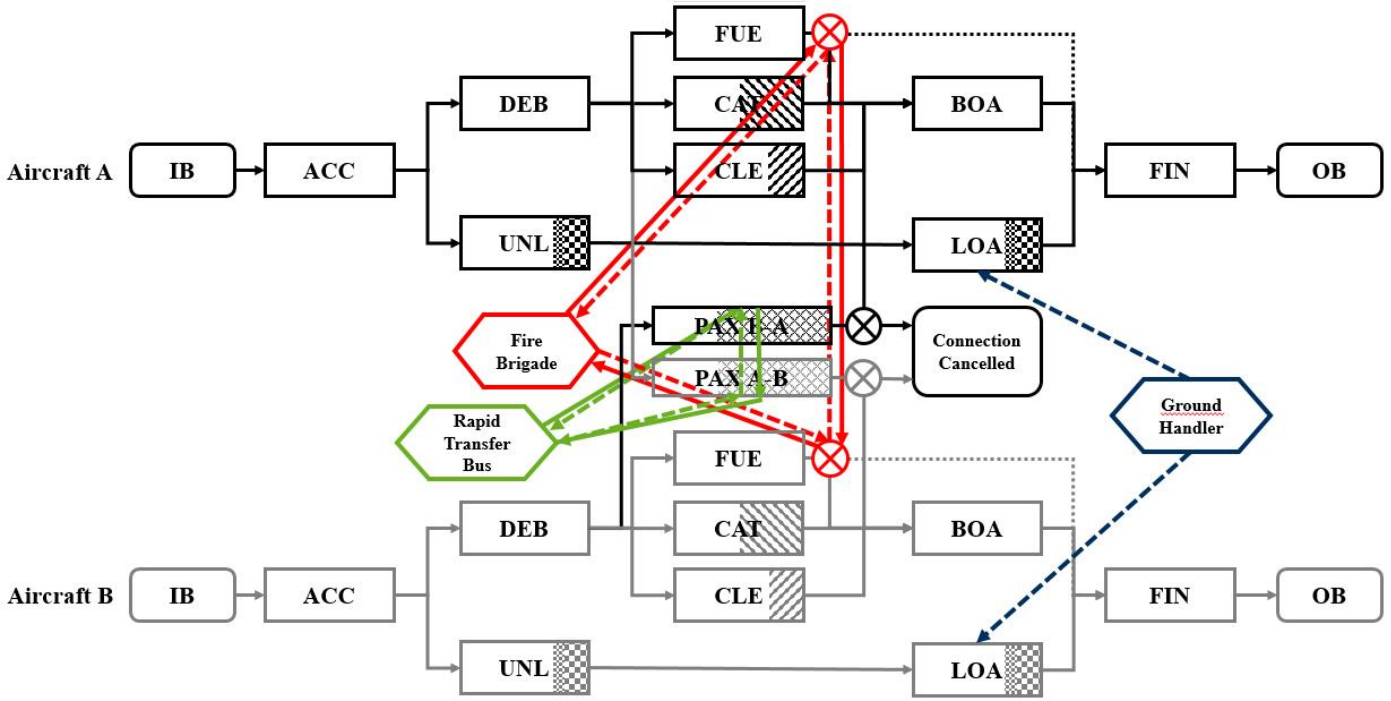

RC_k: Cost of Recovery Action k

Parallelization of Activities

Process Acceleration through Additional Resources

Process Acceleration through Reduced Execution

Acceleration through Link Elimination

Consideration of Resource Sequencing

V. Implementation at a HUB -Airport

HUB

	A320	A320	A320	A320	A330
ARR	8:15	8:45	9:00	9:25	8:00
DEP	9:13	9:31	9:46	10:11	10:57
PAX	125	125	125	125	250
Con PAX	25 to A330	25 to A330	25 to A330	25 to A330	100 (25 to each A320)

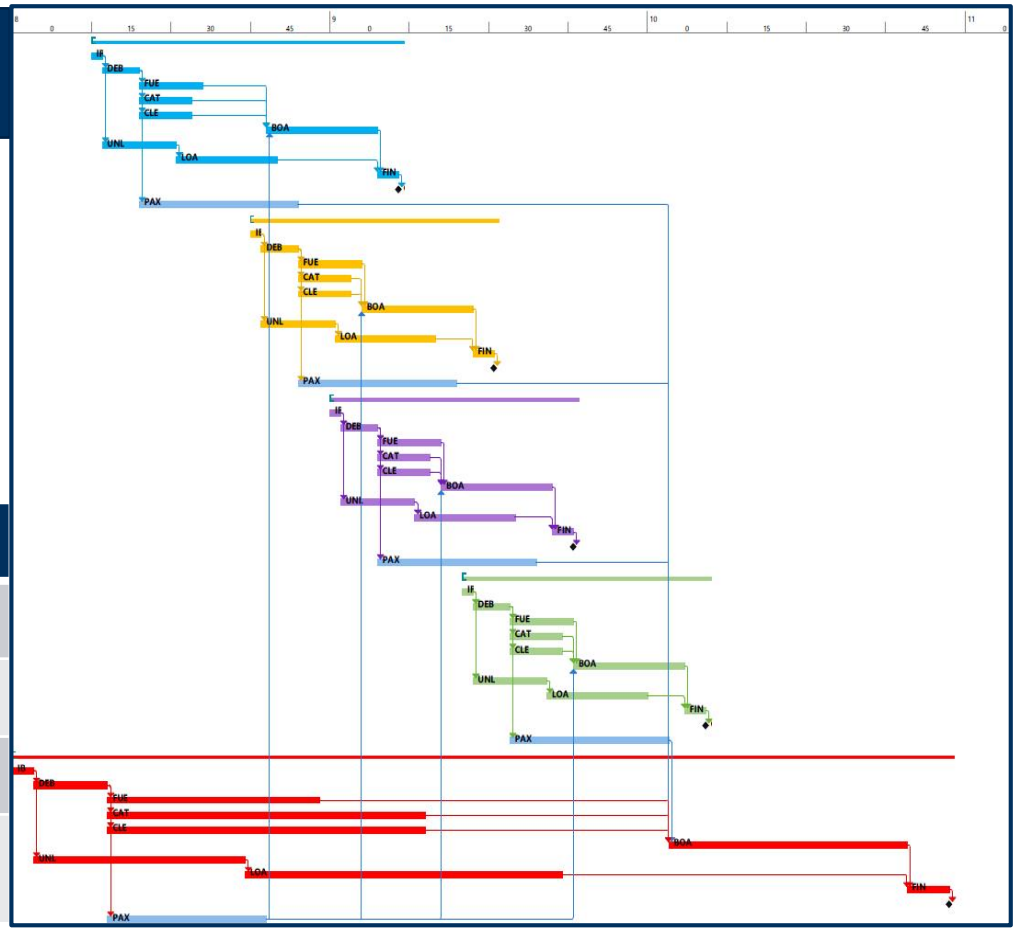

V. Implementation at a HUB -Airport

Parameter Definition

- Constant Delay Costs = **100 monetary units (MU) per minute**
- Costs for Parallel Fuel-Boarding = **200 MU**
- Costs for Quick-Catering = **100 MU**
- Costs for Reduced-Cleaning = **100 MU**
- Costs per additional Loading Agent = **50 MU**
- Costs for Rapid Passenger Transfer = **100 MU**
- Costs for Cancelled Connection = **200 MU per Passenger**
- Number of Available Catering Vehicles = **8** (5 needed for SOP, 1 per aircraft)
- Number of Available Loading Agents = **20** (15 needed for SOP, 3 per aircraft)
- Number of Available Fire Trucks for Parallel Fuel-Boarding = **1** (Scheduling Constraint)

V. Implementation at a HUB -Airport

Scenario Analysis I

Aircraft 2 (Flight TU003) has (15, 30, 60, 90 min) Arrival Delay – 1000 Iterations uncontrolled and controlled

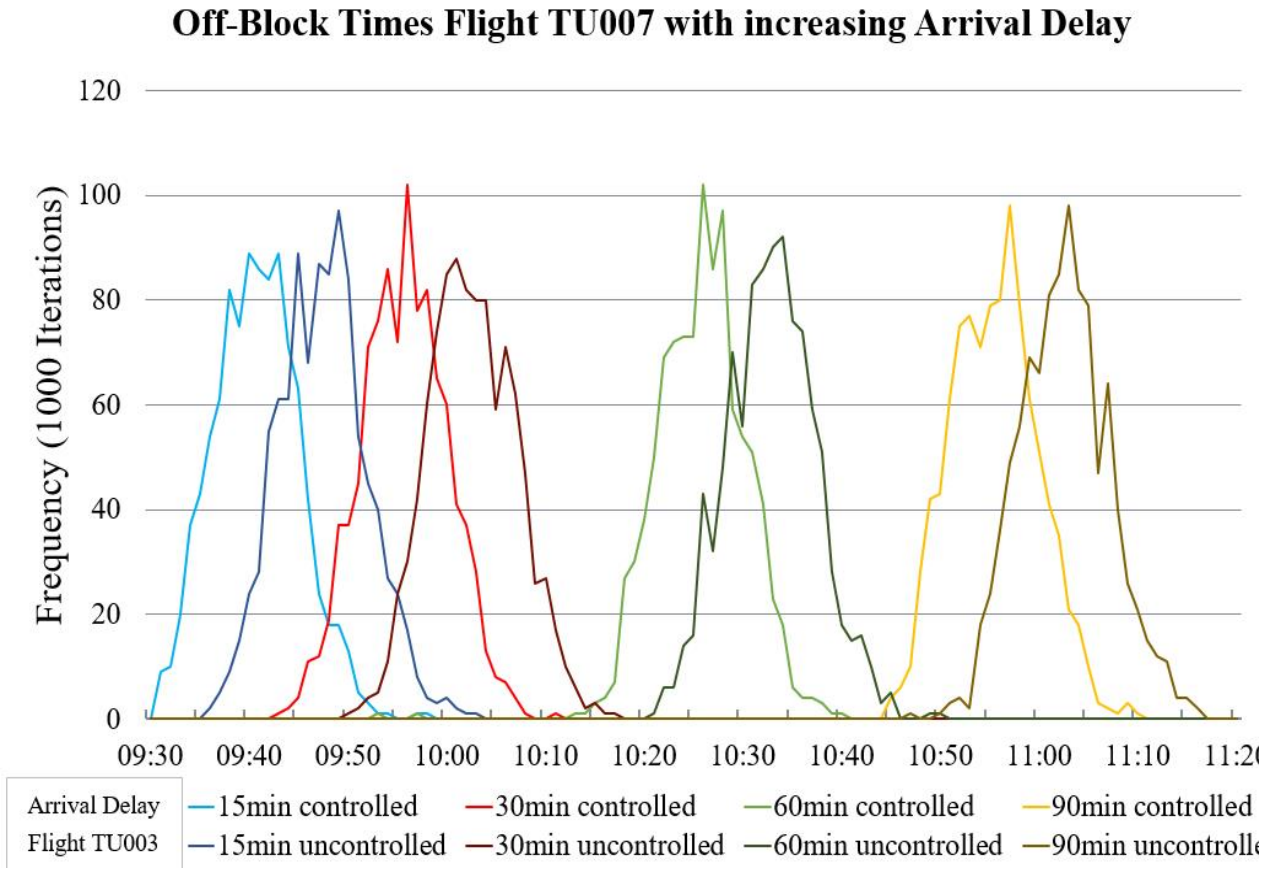

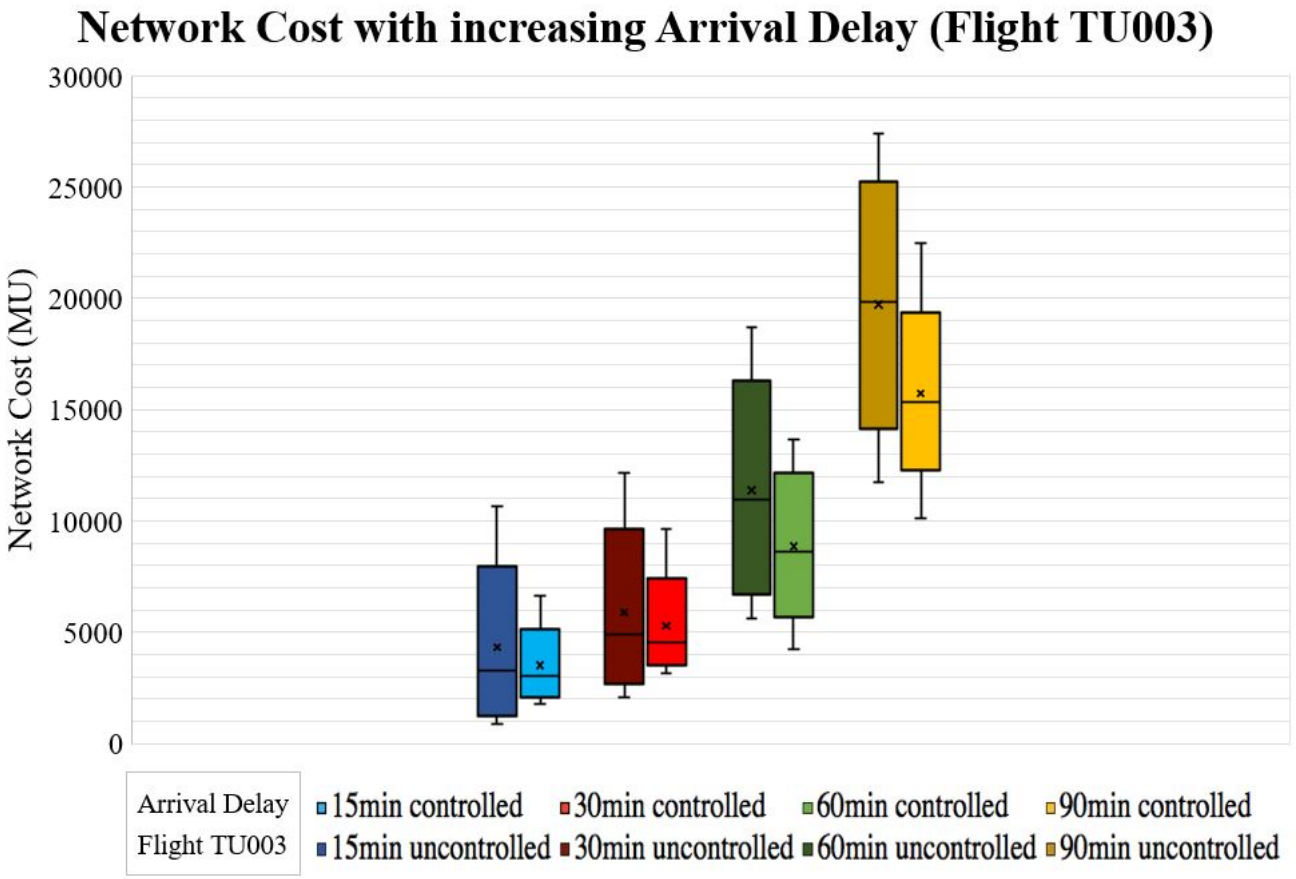

V. Implementation at a HUB -Airport

Scenario Analysis II

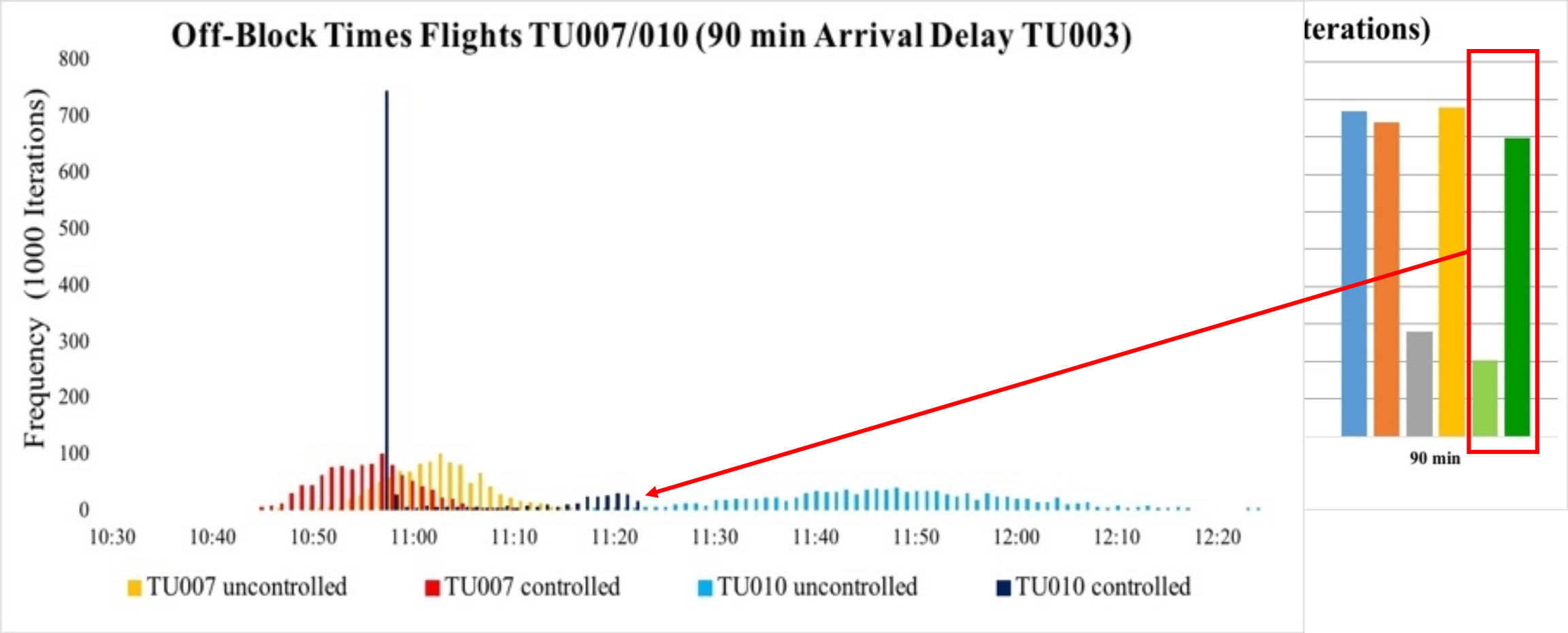

VI. Conclusions

- **Stochastic Turnaround Modell** combines stochastic TOBT prediction and deterministic optimization
- Output of **stochastic TOBT** (uncontrolled and controlled), **network cost comparison** (uncontrolled and controlled) and **set of optimal recovery actions** (with probabilities)
- Opportunities to standardize turnaround control and avoid conflicting controller clearances

Further Research

Expansion of the Modell Scope

- Further Airport Control Options (Gate Dependency, Crew Exch., Delcing Sequence)
- Further Network Control Options
- Delay Propagation and Interaction in HUB-Networks

Methodological Expansion

- Sensitivity Analysis of Process Parameters (Non-Normal Time Distributions)
- Introduction of Chance Constraints
- Introduction of Qualitative Measurements for Control Options

Thank you for your attention

Gefördert durch:

Bundesministerium
für Wirtschaft
und Energie

aufgrund eines Beschlusses
des Deutschen Bundestages

PS-TIMAL

Recap – Time for Questions

- **Stochastic Turnaround Modell** combines stochastic TOBT prediction and deterministic optimization
- Output of **stochastic TOBT** (uncontrolled and controlled), **network cost comparison** (uncontrolled and controlled) and **set of optimal recovery actions** (with probabilities)
- Opportunities to standardize turnaround control and avoid conflicting controller clearances

Further Research

Expansion of the Modell Scope

- Further Airport Control Options
- Further Network Control Options
- Delay Propagation and Interaction in HUB-Networks

Methodological Expansion

- Sensitivity Analysis of Process Parameters
- Introduction of Chance Constraints
- Introduction of Qualitative Measurements for Control Options